ISUZU URBAN N75.150(E)

7.5T GVW

(Easyshift transmission) 4x2 rigid

EURO VI

UK Standard vehicle plated weights (kg)	
GVW	7500
GTW	8250
GTW Optional	11000

UK Axle design weights (kg)	
Front	3100
Rear	6000

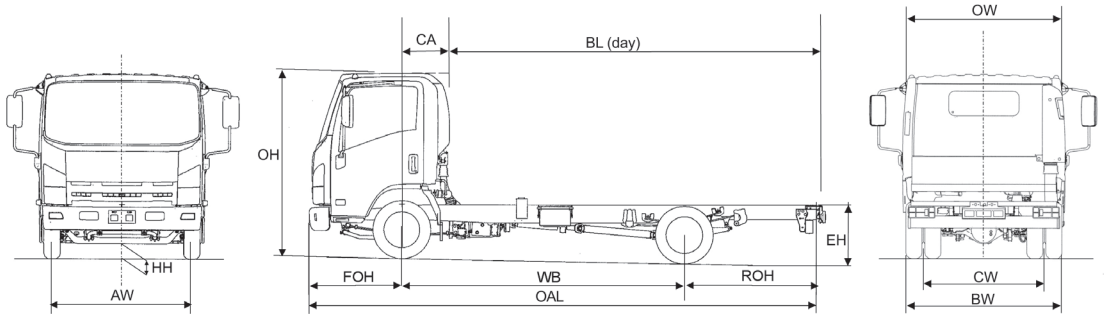

Weights (kg)

Cab type		day	day	day
Wheelbase	**WB**	**3365**	**3815**	**4475**
Vehicle Mass Unladen	Front	1690	1720	1790
	Rear	955	955	940
Total		**2655**	**2675**	**2730**
GVW		7500	7500	7500
Max. Permissible Trailer Weight		3500	3500	3500
Body & Payload Allowance		4845	4825	4770

Dimensions (mm)

Overall Length	OAL	5985	6635	7815
Overhang - Front	FOH	1110	1110	1110
Overhang - Rear	ROH	1510	1710	2230
Cab Gap	CB	170	170	170
C/L Front Axle to Rear of Cab	CA	550	550	550
Recommended Body Length	BL	4267	4876	6096
Chassis Frame Width		850	850	850
Recommended Body Width		2286	2286	2286
Recommended Maximum Body Width		2387†	2387†	2387†
Cab Width	OW	2040	2040	2040
Overall Height (Unladen)	OH	2265	2265	2265
Chassis Height (Unladen)	EH	805	800	780
Minimum Road Clearance	HH	190	190	190
Track - Front	AW	1680	1680	1680
Track - Rear	CW	1650	1650	1650
Rear Axle Width	BW	2129	2129	2129

† Wide mirror arms apply at extra cost.

1. Unladen weights excludes driver, fuel, Ad Blue. Includes spare wheel + carrier (Tolerance ± 3%).
2. Body lengths are given as a guide only. Bodybuilders are responsible for ensuring all legal requirements are met.
3. Maximum body lengths are calculated to remain within the maximum permitted overhang in the UK of 60% of the wheelbase. Cab gaps may vary.
4. Isuzu Truck (UK) Ltd. shall have no liability whatsoever should the information supplied have incorrect data, descriptions or illustrations.

N75.150(E)URBAN/0115/DPCP/3K

ISUZU

ISUZU URBAN N75.150(E)

7.5T GVW

(Easyshift transmission) 4x2 rigid

EURO VI

Mechanical Specification (standard equipment)

Engine 4JJ1TC
Isuzu turbo intercooled 4 cylinder diesel DOHC Euro VI
Bore: 95.4mm
Stroke: 104.9mm
Capacity: 2999cc
Max Power: 110kW (150 PS) at 2800rpm
Max Torque: 375Nm between 1600-2800rpm
Injection Type: Common rail
Euro VI Compliance: EGR- (Exhaust Gas Recirculation) with DPD (Diesel Particulate Diffuser) SCR Adblue and OBD

Fuel Tank
Capacity: 92 litres
Ad Blue: 16 litres

Transmission
Electro hydraulic controlled 6 speed synchromesh MYY6S with fully automated and sequential shift modes

Ratios:	1st	5.979
	2nd	3.434
	3rd	1.862
	4th	1.297
	5th	1.000
	6th	0.759
	reverse	5.701
Rear Axle Ratio:		5.57:1

Tyres: 215/75 R17.5 radial
Wheels: 6.00J x 17.5, 6-stud

Cab Exterior
Aerodynamic Isuzu Hexapod design white all-steel with roof outline markers
Manual tilt to 45 deg.
Chrome radiator grille
Laminated windscreen
Plastic resin non-slip entry steps
90 deg. opening doors
Zinc galvanised frame structure
Steel reinforced composite front bumper with fog and daytime running lamps
2 halogen head lamps with indicators
Front mudguards with spray suppression
Keyless door entry and immobiliser
Aluminium rear bumper

Frame
Parallel ladder type channel section straight side rails, rivet less upper flange

Cooling
Radiator: Tube and fin type with fan and viscous clutch
Frame mounted fuel cooler

Clutch
Fluid coupling torque convertor type with lock-up clutch

Cab Interior
Flame-resistant interior trim
Vinyl floor matting
Pillar mounted entrance grab handles both sides
SRS airbags driver and passenger

Seats (all cloth)
Driver's fully adjustable suspension seat with head restraint (optional on crew cab)
Dual passenger seat, folding back centre with tray
Driver and outer passenger retractable diagonal seat belts, with pre-tensioner
Centre seat lap belt
4-seat passenger (crew cab) with lap belts

Vision
Large foldable, heated mirrors
Interior rear view mirror on collapsible mounting
Driver and passenger sun visors
Deep cut side windows to reduce blind spots
Electric windows with driver control and lock

Heating & Ventilation
4-speed blower
Multiple cab vents

Axles
Front: Reverse Elliott I-Beam
Rear: Banjo fully floating

Suspension
Front: Semi-elliptical alloy steel leaf springs with hydraulic shock absorbers and anti-roll bar
Rear: Semi-elliptical alloy steel leaf springs with hydraulic shock absorbers and anti-roll bar

Steering
Recirculating ball type with full integral hydraulic power assistance
Tilt and telescopic steering column

Brakes
System: ABS Power assisted divided hydraulic, Vacuum Servo with electronic brake distribution and anti slip regulation, Electronic Vehicle Stability Control
Front: 310mm ventilated discs with asbestos free pads
Rear: 310mm ventilated discs with asbestos free pads
Park: Mechanical drum brake rear of transmission

Instruments
Speedometer with odometer & trip
Rev counter
Fuel gauge
Engine coolant temperature
Gearshift indicator display
Multi information display provides information on servicing, emissions and fuel economy
Digital Tachograph

Switches & Electrical
Steering column mounted combination switch for indicators, head lamps (high beam), front and rear fog lights
Wiper and washer (2-speed and intermittent)
Steering wheel horn
Engine idle control
Hazard lights
Head lamp levelling
Interior light
Heated mirror
Key operation for quick cold start, start and stop
Engine quick warm-up
Cigarette lighter
Central locking
Reverse warning
DPD engage
EVSC off
ASR off
Exhaust brake
Heater stage
Easyshift gearbox emergency override
Gearbox engage drive fast/slow
Electronic vehicle speed limiter set at 56mph (90kph)

Warning/Indicator Lamps
Battery charge
Oil pressure
Low fuel
Glow plug operation
High beam and indicators
Parking brake on
Fuel/water separator
Check engine
DPD operation
Engine over heat
Adblue level
EVSC
ABS
Front and rear fog
SVS
ECONO mode
1st gear start
Exhaust brake operation
Seat belt
Brake system
SRS air bag
Brake vacuum loss

Tool Kit
Jack, with a small selection of hand tools

Radio
Radio/CD Player package

Storage Space
Compartment box
Centre console tray
Door pockets
Overhead roof shelf
Storage bin (behind seats)
Card holder

Ancillaries
Starter: Reduction type 24V - 4.0kW
Alternator: 24 V - 80 Amp
Quick Start: 4 glow plugs on start relay
Battery: 2 x 12 V 75 AH (maintenance free)

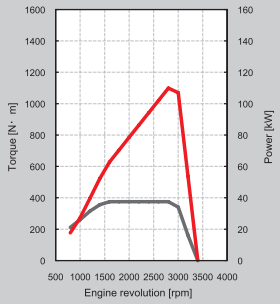

The following optional items are available:

- Isuzu Branded Mats
- Aerodynamic Body Kits
- Satellite Navigation
- Reversing Aids
- PTO Switch
- Telematics

For further information please contact your local dealer, ring us directly on
01707 28 29 30
or visit our website
www.isuzutruck.co.uk

Isuzu Truck (UK) Ltd,
Isuzu House, 164 Great North Road, Hatfield, Hertfordshire AL9 5JN

ISUZU