ISUZU 'GRAFTER' N35.120[T]

3.5T GVW

(Manual transmission) 4x2 rigid twin rear wheels

EURO 5b+

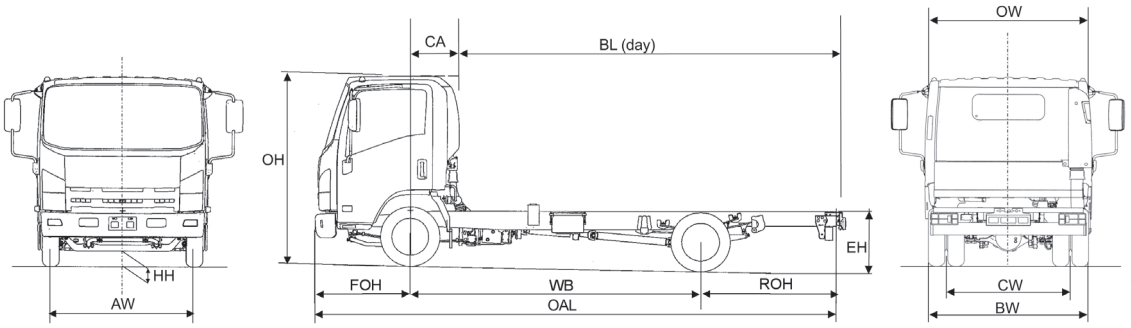

UK Standard vehicle plated weights (kg)	
GVW	3500
GTW	7000

UK Axle design weights (kg)	
Front	2100
Rear	2435

Weights (kg)

Cab type		day	day
Wheelbase	**WB**	**2480**	**3350**
Vehicle Mass Unladen	Front	1445	1445
	Rear	495	535
Total		**1940**	**1990**
GVW		3500	3500
Max. Permissible Trailer Weight		3500*	3500*
Body & Payload Allowance		1560	1510

Dimensions (mm)

Overall Length	OAL	4735	6025
Overhang - Front	FOH	1110	1110
Overhang - Rear	ROH	1145	1565
Cab Gap	CB	130	130
C/L Front Axle to Rear of Cab	CA	463	463
Recommended Body Length	BL	3200	4267
Chassis Frame Width		700	700
Recommended Maximum Body Width		1982	1982
Cab Width	OW	1770	1770
Overall Height (Unladen)	OH	2140	2150
Chassis Height (Unladen)	EH	730	730
Minimum Road Clearance	HH	165	165
Track - Front	AW	1475	1475
Track - Rear	CW	1425	1425
Rear Axle Width	BW	1855	1855

* Driver licence and tachograph regulations apply.

1. Unladen weights include driver 75kg, 90% fuel. (Tolerance ± 3%).
2. Body lengths are given as a guide only. Bodybuilders are responsible for ensuring all legal requirements are met.
3. Maximum body lengths are calculated to remain within the maximum permitted overhang in the UK of 60% of the wheelbase. Cab gaps may vary.
4. Isuzu Truck (UK) Ltd. shall have no liability whatsoever should the information supplied have incorrect data, descriptions or illustrations.

N35.120(T)/0115/DPCP/3K

ISUZU

ISUZU 'GRAFTER' N35.120[T]

3.5T GVW

(Manual transmission) 4x2 rigid twin rear wheels

EURO 5b+

Mechanical Specification (standard equipment)

Engine 4JJ1TC
Isuzu turbo intercooled DOHC 4 cylinder diesel (Euro 5b+)
Bore: 95.4mm
Stroke: 104.9mm
Capacity: 2999cc
Max Power: 88kW (120 PS) at 2800rpm
Max Torque: 300Nm at 1600rpm
Injection Type: Common rail
Euro 5b+ Compliance: EGR (Exhaust Gas Recirculation) with DPD (Diesel Particulate Diffuser), Fuel cooler and OBD

Fuel Tank
Capacity: 68 litres (2480wb)
92 litres (3350wb)

Transmission
5-speed synchromesh MYY5T overdrive

Ratios:	1st	5.315:1
	2nd	5.315:1
	3rd	1.655:1
	4th	1.000:1
	5th	0.721:1
	reverse	5.068:1
Rear Axle Ratio:		3.909:1

Tyres: 205/75 R16C radial
Wheels: 5.50J x 16, 5-stud

Cab Exterior
Aerodynamic Isuzu Hexapod design white all-steel cab
Manual tilt to 45 deg
Laminated windscreen
Plastic resin non-slip entry steps
90 deg. opening cab doors
Zinc galvanised cab frame structure
2 flush mounted halogen headlamps with side mounted indicators
Front tyre mudguards with spray suppression
Steel reinforced composite front bumper with fog and day time running lamps
Chrome radiator grille
Keyless door entry and immobiliser
Aluminium rear bumper

Frame
Ladder type channel section straight side rails, riveted upper flanges

Cooling
Radiator: Tube and fin type with fan and viscous clutch

Clutch
300mm diaphragm type with hydraulic actuation

Cab Interior
Flame-resistant interior trim
Vinyl floor matting
Pillar mounted entrance grab handles both sides
SRS air-bags driver and passenger

Seats (all cloth)
Drivers fully adjustable with head restraint
Dual passenger seat with folding back
Driver and outer passenger retractable diagonal seat belts, with pre-tensioner
Centre seat lap belt
3 passenger rear seat (crew cab) with lap belts

Vision
Large foldable door mirrors
Interior rear view mirror on collapsible mounting
Driver and passenger sun visors
Deep cut side windows to reduce blind spots
Electric windows with driver control

Heating & Ventilation
4-speed blower
Multiple cab vents

Axles
Front: Reverse Elliott I-Beam
Rear: Banjo fully floating

Suspension
Front: Semi elliptical alloy steel leaf springs and hydraulic shock absorbers
Rear: Semi elliptical alloy steel leaf springs with hydraulic double acting telescopic shock absorbers

Steering
Recirculating ball type with full integral hydraulic power assistance
Tilt and telescopic steering column

Brakes
System: Divided hydraulic servo-assisted with ABS, ASR, EVSC
Front: 293mm ventilated discs with asbestos-free pads
Rear: 275mm ventilated discs with asbestos-free pads
Park: Mechanical drum brake rear of transmission

Instruments
Speedometer with odometer and trip
Rev counter
Fuel gauge
Engine coolant temperature

Switches & Electrical
Steering column mounted combination switches for indicators, headlamps (high beam), side and rear fog lights
Wiper and washer (2-speed and intermittent)
Steering wheel horn
Engine idle control
Hazard lights
Head lamp levelling
Interior light
Key operation for quick cold start, start and stop
Engine quick warm-up
Cigarette lighter
Central locking
Reverse warning
DPD engage
Front fog lights
EVSC off
ASR off
Heater stage

Warning/Indicator Lamps
Battery charge
Oil pressure
Low fuel
Glow plug operation
High beam and indicators
Parking brake on
Fuel/water separator
Check engine
DPD operation
Engine over heat
EVSC
ABS
Front and rear fog
SVS
Seat belt
Brake system
SRS air bag
Brake vacuum loss

Tool Kit
Jack, with a small selection of hand tools

Radio
Radio / CD Player package

Storage Space
Compartment box
Centre console trays
Door pockets
Centre facia pockets
Pop out type cup holder
Overhead roof shelf
Drivers seat back pocket
Card holder

Ancillaries
Starter: Reduction type 24 V - 4.0kW
Alternator: 24 V - 50 Amp
Quick Start: 4 glow plugs on start relay
Battery: 2 x 12 V - 75 AH (maintenance free)

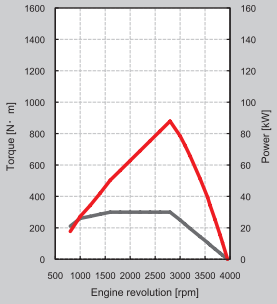

The following optional items are available:

- Isuzu Branded Mats
- Suspension Seat
- Satellite Navigation
- Reversing Aids
- Digital Tachograph
- Road Speed Limiter
- PTO Switch
- Telematics

For further information please contact your local dealer, ring us directly on
01707 28 29 30
or visit our website
www.isuzutruck.co.uk

Isuzu Truck (UK) Ltd,
Isuzu House, 164 Great North Road, Hatfield, Hertfordshire AL9 5JN

ISUZU